WATER PRESSURE BOOSTER SYSTEMS

SUBMITTAL DATA

Series WPB

APPLICATION

Applications include commercial, industrial, and other installations requiring a boost in water pressure. **The Penn Pump & Equipment Company** Water Pressure Booster System will efficiently provide a steady downstream pressure regardless of a varying flow rate and/or varying inlet pressure.

DESIGN FEATURES

- NSF/ANSI 61 & 372 certified system
- Professionally engineered components
- Compact design minimizes floor space
- Single source responsibility
- Factory assembled and tested

Certified to NSF/ANSI 61 & 372

PROJECT INFORMATION

Project Name:		Model No. Ordered:
Customer:		Total Capacity:
Engineer:		Boost Pressure:
Reference:	Penn Pump Project Number:	Motor HP:
Date:	PO Number:	Voltage:

SPECIFY WITH CONFIDENCE, SPECIFY PENN PUMP SYSTEMS

Penn Pump & Equipment Company, Inc., 2880 Bergey Road Unit O, Hatfield, PA 19440, 215-997-6100, (Fax) 215-997-6195, sales@pennpump.com, © 2015

WATER PRESSURE BOOSTER SYSTEMS: SERIES WPB
SUBMITTAL DATA

Furnish and install a packaged water pressure booster system series WPB as manufactured by **Penn Pump & Equipment Company, Inc.,** of Hatfield, PA (215-997-6100). The packaged and tested system shall provide the capacity as scheduled on the drawings. The complete packaged system shall be certified and labeled to NSF/ANSI 61 & 372 standards.

A. The pump shall be cast iron bronze fitted, end suction, close coupled centrifugal type with a minimum of 175 psi case working pressure, equipped with a bronze shaft sleeve and a mechanical seal. The pump shall include a bronze modulating thermal safety valve to prevent overheating of the pump casing.

B. Each pump shall include a two-piece bronze 600psi WOG non-shock ball valve, isolation valves on the inlet and outlet of each pump to provide service of the pump or control valve, and a spring actuated bronze body check valve.

C. Provide a NEMA 1 system logic controller mounted and wired to contain:

- Single point power connection
- Main disconnect switch with cover interlock
- Individual motor circuit protectors
- Variable Frequency Drives, each with a pressure transducer
- HOA selector switches
- No flow system shut down
- Electronic pump alternation
- Lead pump failure protection
- Low suction shut down with alarm light
- High System pressure shutdown with alarm light
- Remote monitoring contacts

D. The pump package shall include a 44 gallon hydropneumatic tank mounted and piped on the package. The tank shall also include a pressure relief valve, pressure gauge, and tank isolation valves.

E. The packaged pumping system shall be factory assembled and tested with type "L" copper piping and shall include pressure gauges. It shall be cleaned and painted with a high grade enamel prior to shipment. The service of a factory trained representative shall be made available on the project site for start-up and instructing operating personnel.

Certified to NSF/ANSI 61 & 372

SPECIFY WITH CONFIDENCE, SPECIFY PENN PUMP SYSTEMS

WATER PRESSURE BOOSTER SYSTEMS

SUBMITTAL DATA

Model Number	GPM Each Pump	Pump Head		Pump HP	Header Size Suction Disch.	Pump Model	Model Number	GPM Each Pump	Pump Head		Pump HP	Header Size Suction Disch.	Pump Model
		PSI	Feet						PSI	Feet			
WPB-6020		20	45	1.5		1250	WPB-16020		20	45	3		1550
6030		30	70	2	2" Simplex	1250	16030		30	70	5		1550
6040		40	95	3		1250	16040		40	95	7.5		1550
6050		50	115	5		1070	16050	160	50	115	7.5	4" Duplex	1270
6060	60	60	140	5	3" Duplex	1070	16060		60	140	10		1270
6070		70	160	5		1070	16070		70	160	15	6" Triplex	1270
6080		80	185	7.5		1070	16080		80	185	15		1270
6090		90	210	7.5	3" Triplex	1070	16090		90	210	20		1595
60100		100	231	10		1270	160100		100	231	20		1595
WPB-8020		20	45	1.5		1550	WPB-18020		20	45	5		1550
8030		30	70	3	2" Simplex	1550	18030		30	70	5		1550
8040		40	95	5		1550	18040		40	95	7.5		1550
8050		50	115	5		1070	18050		50	115	10	4" Duplex	1570
8060	80	60	140	7.5	3" Duplex	1070	18060	180	60	140	10		1570
8070		70	160	7.5		1070	18070		70	160	15	6" Triplex	1570
8080		80	185	7.5		1070	18080		80	185	15		1570
8090		90	210	7.5	3" Triplex	1070	18090		90	210	20		1595
80100		100	231	10		1595	180100		100	231	20		1595
WPB-10020		20	45	2		1550	WPB-20020		20	45	3		2050
10030		30	70	3	2" Simplex	1550	20030		30	70	5		2050
10040		40	95	5		1550	20040		40	95	7.5		1570
10050		50	115	5		1070	20050		50	115	10	4" Duplex	1570
10060	100	60	140	7.5	3" Duplex	1070	20060	200	60	140	10		1570
10070		70	160	7.5		1070	20070		70	160	15	6" Triplex	1570
10080		80	185	10		1070	20080		80	185	15		1570
10090		90	210	10	4" Triplex	1270	20090		90	210	20		1595
100100		100	231	15		1595	200100		100	231	25		1595
WPB-12020		20	45	2		1550	WPB-25020		20	45	5		2050
12030		30	70	3	2" Simplex	1550	25030		30	70	7.5		2070
12040		40	95	5		1550	25040		40	95	10		2070
12050		50	115	7.5		1070	25050		50	115	10	4" Duplex	2070
12060	120	60	140	7.5	3" Duplex	1070	25060	250	60	140	15		2070
12070		70	160	10		1070	25070		70	160	15	6" Triplex	2070
12080		80	185	10		1270	25080		80	185	20		2070
12090		90	210	10	4" Triplex	1270	25090		90	210	25		1595
120100		100	231	15		1595	250100		100	231	25		2095
WPB-14020		20	45	3		1550	WPB-30020		20	45	7.5		2070
14030		30	70	5	3" Simplex	1550	30030		30	70	10		2070
14040		40	95	5		1550	30040		40	95	15		2070
14050	140	50	115	7.5		1270	30050		50	115	15	4" Duplex	2070
14060		60	140	7.5	3" Duplex	1270	30060	300	60	140	15		2070
14070		70	160	10		1270	30070		70	160	20	6" Triplex	2070
14080		80	185	10		1270	30080		80	185	20		2070
14090		90	210	15	4" Triplex	1270	30090		90	210	30		2095
140100		100	231	15		1595	300100		100	231	30		2095

Note: Selections are 3500 RPM.

Header options:

- ☐ 304 Schedule 40 Stainless Steel
- ☐ Class 125/150 ANSI Flanged
- ☐ Grooved

Certified to NSF/ANSI 61 & 372

SPECIFY WITH CONFIDENCE, SPECIFY PENN PUMP SYSTEMS

Penn Pump & Equipment Company, Inc., 2880 Bergey Road Unit O, Hatfield, PA 19440, 215-997-6100, (Fax) 215-997-6195, sales@pennpump.com, © 2017

WATER PRESSURE BOOSTER SYSTEMS

SUBMITTAL DATA

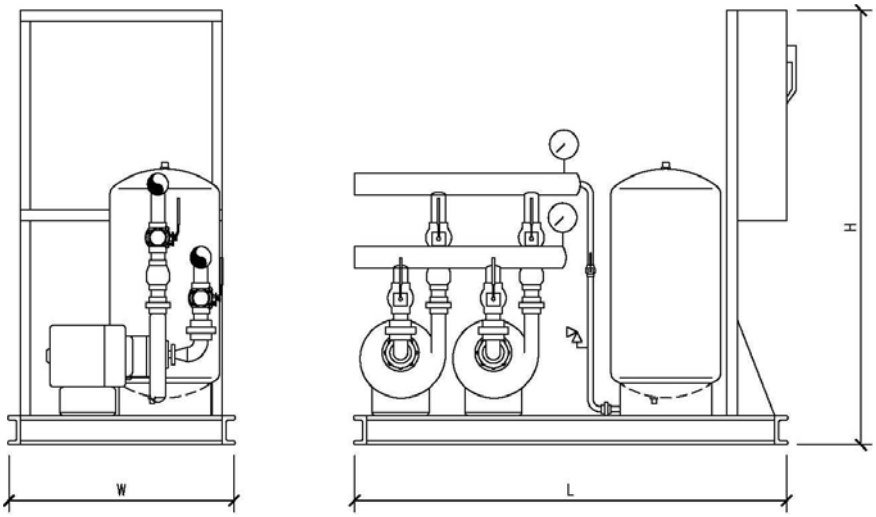

SYSTEM DIMENSIONS
DUPLEX

HP Per Pump	L x W x H (inches)	Dry Wgt. (Lbs.)
1.5 - 7.5	72 x 34 x 60	1300
10 - 15	78 x 34 x 60	1450
20 - 30	84 x 40 x 60	1700

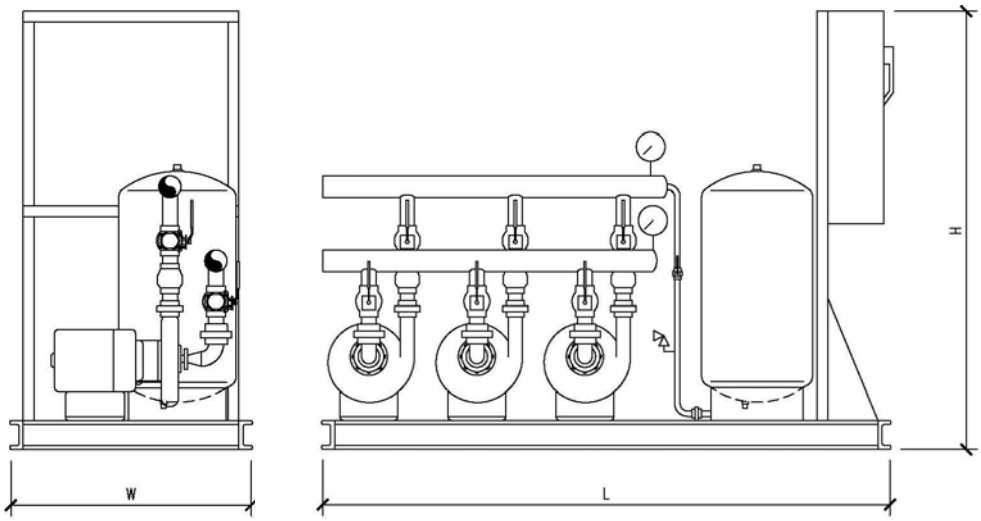

SYSTEM DIMENSIONS
TRIPLEX

HP Per Pump	L x W x H (inches)	Dry Wgt. (Lbs.)
1.5 - 7.5	90 x 34 x 60	1600
10 - 15	96 x 34 x 60	1900
20 - 30	108 x 40 x 60	2250

NSF
Certified to NSF/ANSI 61 & 372

SPECIFY WITH CONFIDENCE, SPECIFY PENN PUMP SYSTEMS

Penn Pump & Equipment Company, Inc., 2880 Bergey Road Unit O, Hatfield, PA 19440, 215-997-6100, (Fax) 215-997-6195, sales@pennpump.com, © 2015

SUBMITTAL DATA

CENTRIFUGAL PUMPS

DESIGN FEATURES

- Cast Iron Bronze fitted construction
- Back pull out design
- Compact design minimizes floor space
- Factory assembled and tested
- Built according to Hydraulic Institute – NEMA Standards

STANDARD CONSTRUCTION

- Cast Iron Casing
- Bronze Impeller
- Carbon Steel Shaft
- Bronze Shaft Sleeve
- Bronze Case Wear Ring
- Open Drip-Proof Motor
- Single Mechanical Seal
- Maximum Working Pressure 175 PSI

OPTIONS

- TEFC or Explosion-Proof Motors
- High Temperature Seals
- Special Alloy Shaft Seals
- Higher Working Pressure

NSF®
Certified to NSF/ANSI 61 & 372

SPECIFY WITH CONFIDENCE, SPECIFY PENN PUMP SYSTEMS

Penn Pump & Equipment Company, Inc., 2880 Bergey Road Unit O, Hatfield, PA 19440, 215-997-6100, (Fax) 215-997-6195, sales@pennpump.com, © 2015

WATER PRESSURE BOOSTER SYSTEMS

SUBMITTAL DATA

The integrated pump specific software and setup parameters, allow the operator to set up specific control values for a wide range of applications. iQpump will automatically adjust pump operating conditions, as the process variables change while still maintaining optimum pump performance and protection.

Most existing systems, which require constant pressure or flow control, are using bypass lines, pressure release valves, throttling valves or impeller trim adjustments. The most efficient method is pump speed control. Pump speed control will reduce energy consumption, while maintaining system optimization.

The iQpump Controller can be configured for Simplex, Duplex, Triplex or up to an eight-pump system. One iQpump Controller can be used as a master, which can also control one or two secondary pump motors. The secondary pump motors can be connected using mechanical motor starters, reduced voltage soft starters, or additional iQpump drives. The software is structured in such a way that it only has a few basic pump parameters to be setup to run this application.

The iQpump controller is available from 5 to 500 horsepower. In addition to Water Pressure Booster Pumps in Commercial and Industrial applications, the iQpump controller is suitable for a variety of other pumping applications such as Submersible Deep Well Pumps, Storage Tank Level Control, Metering Pumps, and HVAC pumps and fans.

Drive Performance Features

- Ratings: 5-150 HP, 208 VAC 5-150 HP, 230 / 240 VAC 5-500 HP, 480 VAC
- Overload capacity: nominal 110% for 60 sec. (150% peak)
- Starting torque: 100% at 3 Hz
- Motor preheat function
- Adjustable accel/decel: 0.1 to 6000 sec.
- Controlled speed range: 40:1
- Critical frequency rejection: 3 selectable, adjustable bands
- Torque-limiting: 30-180%
- Energy Saving control
- Torque boost: full range, auto
- Power loss ride-thru: 2 sec.
- Auto restart after power loss or fault reset, selectable, programmable
- Feedback signal loss detection
- Serial communications loss detection
- "Up/Down" floating point control capability (PI)
- Stationary motor auto-tuning
- Pump Sleep function
- Run-permissive input

Pump Control Features

- Operator Keypad with intuitive pump language
- Hand-Off-Auto
- Programmable Pump Process Set Point
- Pump Start Level & Start Time
- Sleep Protection
- Simplex, Duplex, & Triplex Control
- Automatic System Restart
- No Flow Detection
- Low and High Feedback set points
- Pre-Charge Low Level Control
- Thrust Bearing Control
- Automatic System Stabilization
- Motor Condensation Pre-Heat Function

Protective Features

- Current-limited stall prevention
- Heat sink over-temperature, speed fold-back
- Bi-directional start into rotating motor
- Current-limiting DC bus fuse
- Optically-isolated controls
- Short circuit protection: Phase-phase and phase-neutral
- Ground fault protection
- Short circuit withstand rating: 100K RMS
- Electronic motor overload: UL
- Current limit
- Fault display: last 10 faults
- Fault circuit: OC, OV, OT
- Over torque and under torque protection

Pump Protective Features

- Dry Well
- Air in System
- Blocked Impeller
- Pump over Cycling
- No Flow Protection
- Loss of Prime
- Transducer Loss
- Over Torque

Pump Alarms and Messages

- Low Feedback
- High Feedback
- Low Level
- Low Water
- Pump Over Cycling
- No Flow Detection
- Loss of Prime
- Pump Fault
- Motor Thermostat
- Pre-Charge Mode
- Thrust Bearing Active
- Start Mode Active
- Sleep Mode Active

Service Conditions

- Ambient Temperature:
- -10°C to 40°C (14° F to 104° F) NEMA 1, -10°C to 45°C (14° F to 113° F) protected chassis
- Humidity: 95% RH, non-condensing
- Altitude: 3300 ft; higher by derate
- Input voltage: +10%/-15%
- Input frequency: 50/60 Hz ± 5%
- 3-phase, 3-wire, phase sequence insensitive

Design Features

- LCD keypad display, 5 lines x 16 characters, backlit, 6 languages, copy function
- Multi-step speed settings: 5 available
- Setpoint (PI) control
- 32-bit microprocessor logic
- Non-volatile memory, program retention
- Displacement power factor: 0.98
- Output frequency: 0.1 to 120 Hz
- Frequency resolution: 0.06 Hz
- Frequency regulation: 0.1%
- Control Terminal Board: Quick disconnect
- Carrier frequency: selectable to 15 kHz
- 3% DC bus reactor: 30-150 HP, 208 VAC; 30-150 HP, 240 VAC; 40-500 HP, 480 VAC; optional on lower ratings
- 24 VDC control logic, PNP / NPN selectable
- Transmitter/Option power supply
- Input/output terminal status
- Timer function: Elapsed time, Delay on start, Delay on stop
- RS-422/485 port: Modbus protocol
- Volts/hertz ratio: Preset and programmable V/Hz patterns
- Meter Functions: Volt, amp, kilowatt, elapsed run time, speed command
- NEMA 1 or protected chassis
- UL, cUL listed and CE marked; IEC 146;
- MTBF: exceeds 28 years

SPECIFY WITH CONFIDENCE, SPECIFY PENN PUMP SYSTEMS

Penn Pump & Equipment Company, Inc., 2880 Bergey Road Unit O, Hatfield, PA 19440, 215-997-6100, (Fax) 215-997-6195, sales@pennpump.com, © 2015

WATER PRESSURE BOOSTER SYSTEMS

TYPICAL POWER CIRCUIT WIRING

DUPLEX

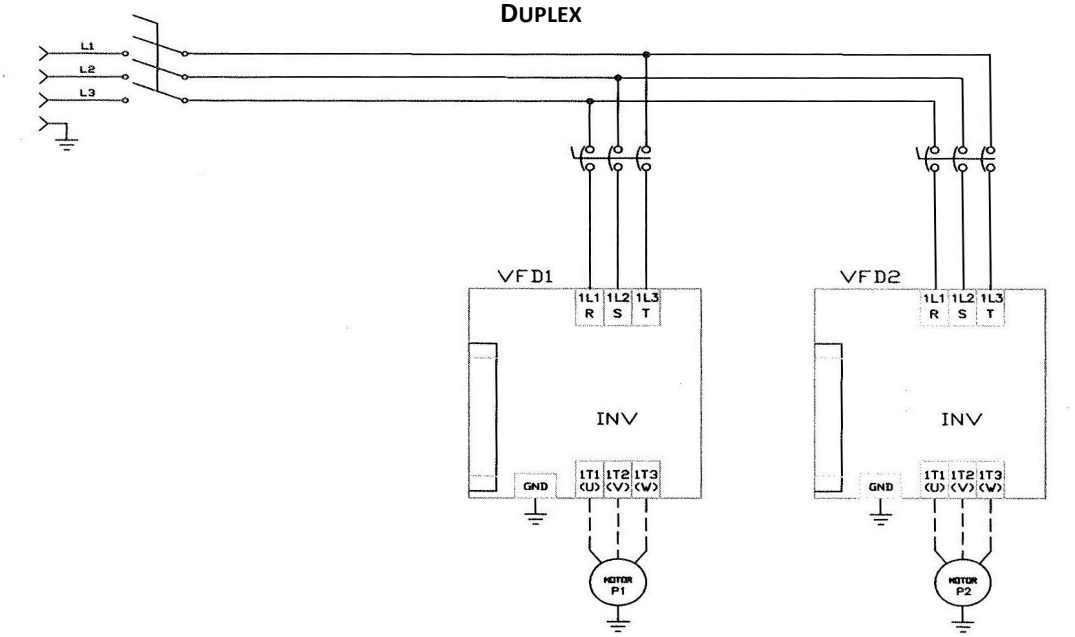

APPROXIMATE FULL LOAD AMPS PER MOTOR

Voltage	Horsepower									
	1 ½	2	3	5	7 ½	10	15	20	25	30
200	4.6	6.2	7.0	15.4	21.8	28.8	42.1	57.5	69.7	83.5
230	4.2	5.4	7.8	13.3	19.0	25.0	36.5	50.0	60.5	72.5
460	2.1	2.7	3.9	6.7	9.5	12.5	18.3	25.0	30.3	36.3

TRIPLEX

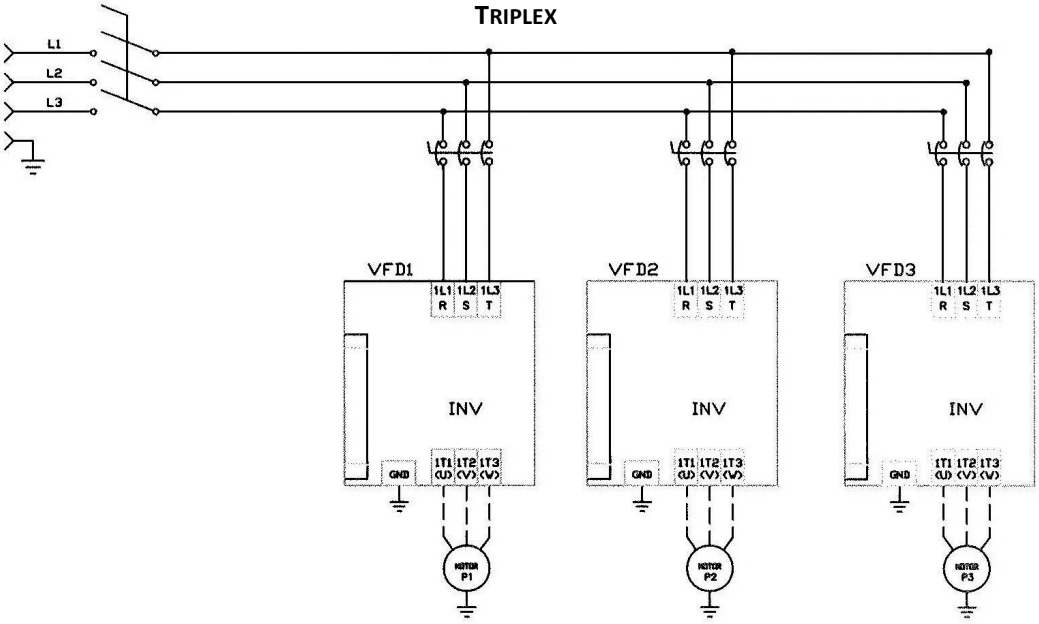

SPECIFY WITH CONFIDENCE, SPECIFY PENN PUMP SYSTEMS

Penn Pump & Equipment Company, Inc., 2880 Bergey Road Unit O, Hatfield, PA 19440, 215-997-6100, (Fax) 215-997-6195, sales@pennpump.com, © 2015

WATER PRESSURE BOOSTER SYSTEMS

SUBMITTAL DATA

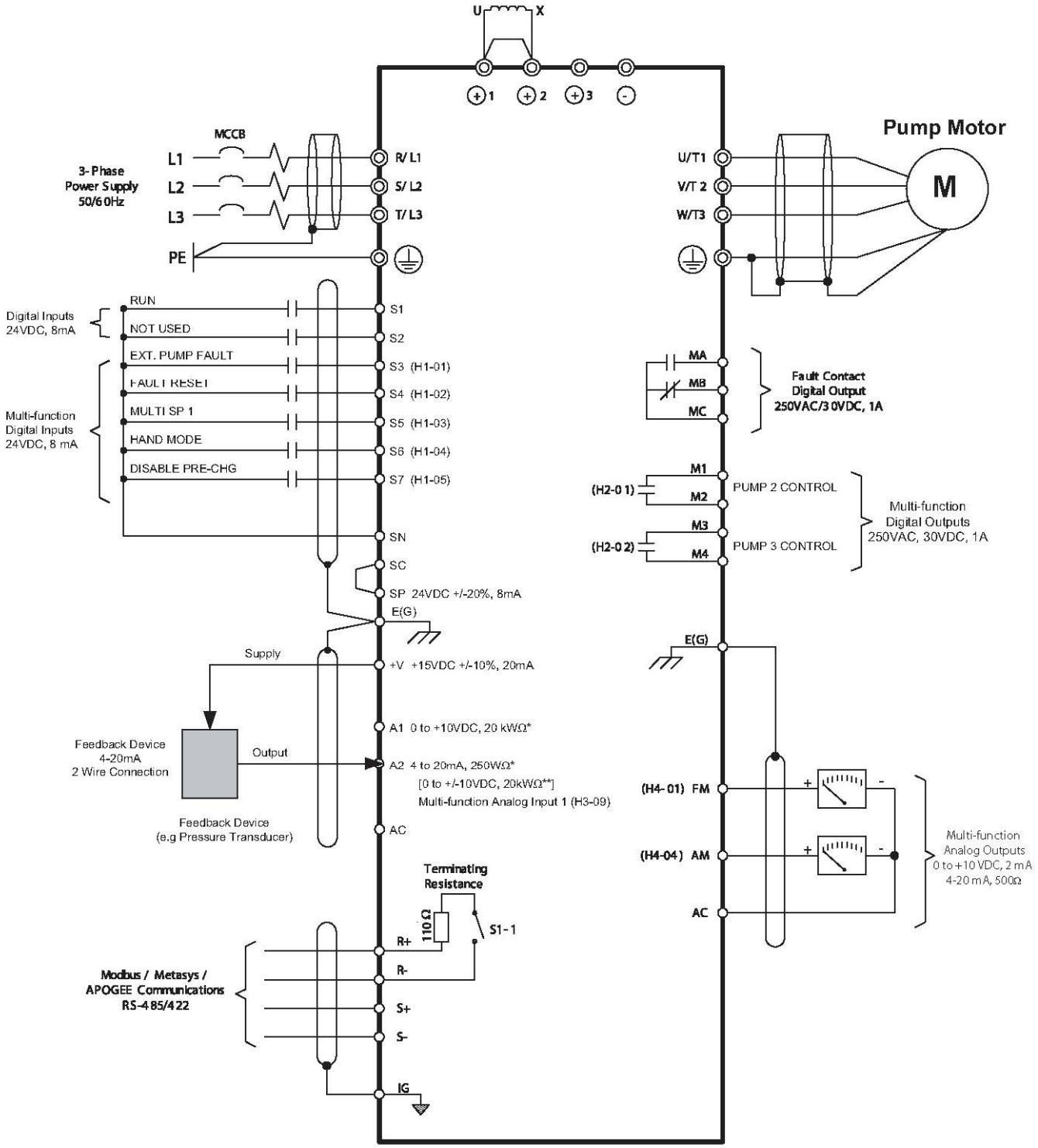

SPECIFY WITH CONFIDENCE, SPECIFY PENN PUMP SYSTEMS

WATER PRESSURE BOOSTER SYSTEMS

SUBMITTAL DATA

FULL PORT, TWO PIECE, BRASS BALL VALVE

Body	Brass
Ball	Chrome plated brass
Seat	PTFE
Pressure Rating	600 PSI

LUG STYLE BUTTERFLY VALVE

Body	Ductile Iron
Stem	416SS
Disc	Aluminum Bronze
Seat	EPDM
Pressure Rating	200 PSI

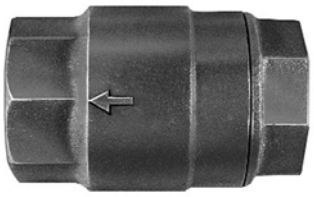

BRONZE SILENT CHECK VALVES

Body	Bronze
Seat	PTFE
Spring	Stainless Steel
Pressure Rating	250 PSI

WAFER TYPE CHECK VALVE

Body	Cast Iron ASTM A126-B
Trim	Bronze ASTM B62/316 SS
Spring	302 Stainless Steel, ASTM A276
Pressure Rating	250 PSI

NSF

Certified to NSF/ANSI 61 & 372

SPECIFY WITH CONFIDENCE, SPECIFY PENN PUMP SYSTEMS

Penn Pump & Equipment Company, Inc., 2880 Bergey Road Unit O, Hatfield, PA 19440, 215-997-6100, (Fax) 215-997-6195, sales@pennpump.com, © 2015

WATER PRESSURE BOOSTER SYSTEMS

SUBMITTAL DATA

HYDRO-CUSH TANK

Capacity	44 Gallons Standard	☐ 86 Gallons Optional
System Connection	Stainless Steel	
Diaphragm	Butyl	
Liner	Polypropylene	
Pressure Rating	150 PSIG	

PRESSURE RELIEF VALVE

Body	Bronze
Seat	Bronze
Valve	Stainless Steel
Pressure Rating	150 PSIG

THERMAL PURGE VALVE

Body	Brass
Seat	Brass
Spring	300 Series Stainless Steel
Seal	Buna-N
Pressure Rating	300 PSIG
Set Temperature	105°F

PRESSURE GAUGE

Case	Stainless Steel
Bourdon Tube	Brass
Size	4 ½" Dial
Face	Glass

Certified to NSF/ANSI 61 & 372

SPECIFY WITH CONFIDENCE, SPECIFY PENN PUMP SYSTEMS

Penn Pump & Equipment Company, Inc., 2880 Bergey Road Unit O, Hatfield, PA 19440, 215-997-6100, (Fax) 215-997-6195, sales@pennpump.com, © 2015