GLYCOL MAKE-UP SYSTEM

WIRING DIAGRAM AND PARTS LIST

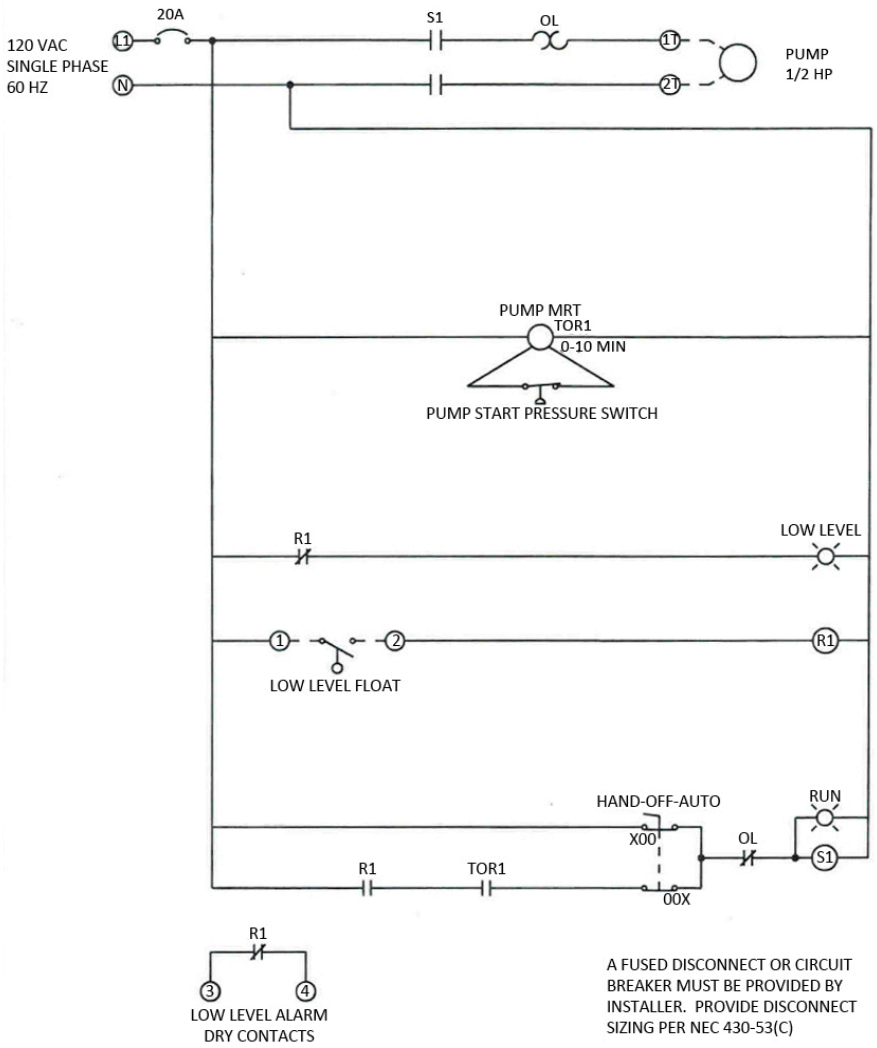

PARTS LIST

Part Number	Item
GMS-RB120	Low Water Cutoff
GMS-PANEL-TM	Starter Switch Controller
GMS-FYG2J25	Pressure Switch
GMS-RV	Relief Valve

Part Number	Item
GMS-PUMP	Pump only
GMS-871	½ HP Motor
GMS-TANK100	100 Gal. Solution Tank
GMS-TANK50	50. Gal. Solution Tank
GMS-TANK30	30. Gal. Solution Tank

SPECIFY WITH CONFIDENCE, SPECIFY PENN PUMP SYSTEMS